디지털 논리

Combinational Circuit Delay

이 상 화

Objectives

- Design multiple output circuits with limited fan-in
- Draw timing diagram for a combinational circuit with gate delays
- Understand the 0 and 1 hazard due to gate delays

Important Parameters

- **Fan-in:**
  - # of inputs available on a gate
- **Fan-out:**
  - # of standard loads
- **Noise margin:**
  - maximum external noise voltage
- **Power dissipation:**
  - power consumed by the gate
- **Propagation delay:**
  - the delay time for the change in value of a signal to propagate from input to output

General Procedure of Design

- 1. Find truth table of a desired function
- 2. Use Karnaugh map or Quine-McCluskey method to simplify the sum of product (product of sums) form
- 3. Design AND-OR (OR-AND) gate circuits
- 4. If required, convert it into NAND-NAND (NOR-NOR) gate circuits
- 5. Find the common terms in the circuits, and use them to minimize gates
- 6. For more reduction of gates and constraints, design multi-level circuits

Design with Limited Fan-in (I)

Example: Realize the functions given below
<u>using only 2-input NAND gates and inverters.</u>

First, minimize each function separately.

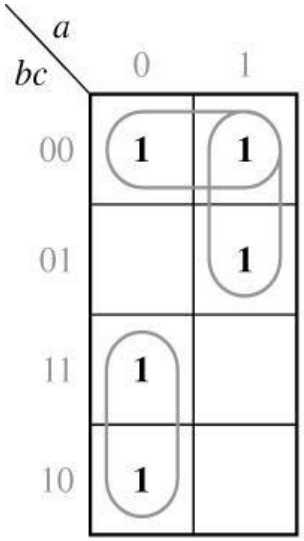

$f_1 = \Sigma m\,(0, 2, 3, 4, 5)$

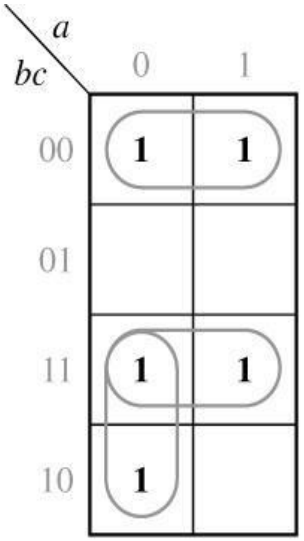

$f_2 = \Sigma m\,(0, 2, 3, 4, 7)$

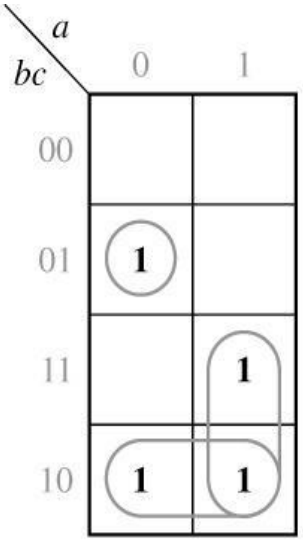

$f_3 = \Sigma m\,(1, 2, 6, 7)$

$$f_1 = b'c' + ab' + a'b$$
$$f_2 = b'c' + bc + a'b$$
$$f_3 = a'b'c + ab + bc'$$

3-input OR gates,
3-input AND gate

Design with Limited Fan-in (II)

Algebra manipulation for 2 input gates: Distributive law, …

$$f_1 = b'c' + ab' + a'b$$
$$f_2 = b'c' + bc + a'b$$
$$f_3 = a'b'c + ab + bc'$$

$$f_1 = b'(\underline{a + c'}) + \underline{a'b}$$
$$f_2 = b(a' + c) + \underline{b'c'}$$
$$f_3 = a'b'c + b(\underline{a + c'})$$

$$f_2 = (b' + c)(\underline{\underline{b + c'}}) + \underline{a'b}$$

$$a'b'c = a'(b'c) = a'(\underline{\underline{b + c'}})'$$

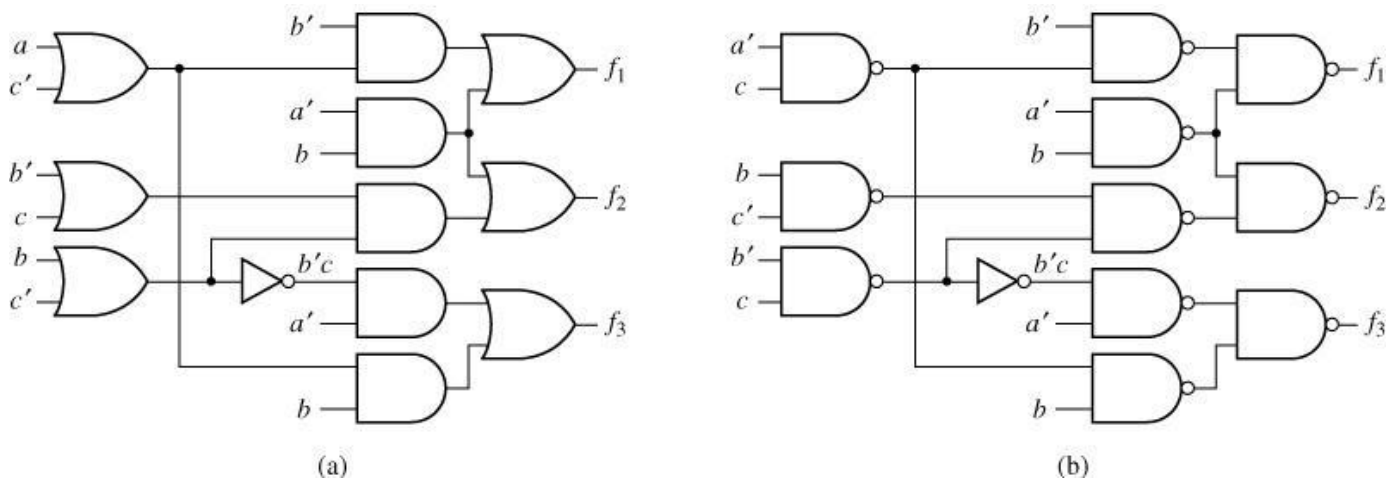

Realization of 2-input gates (a) AND-OR, (b) NAND-NAND

Gate Delay

- Propagation delay when changing digital states
  - MAX (low-to-high propagation time, high-to-low propagation time)

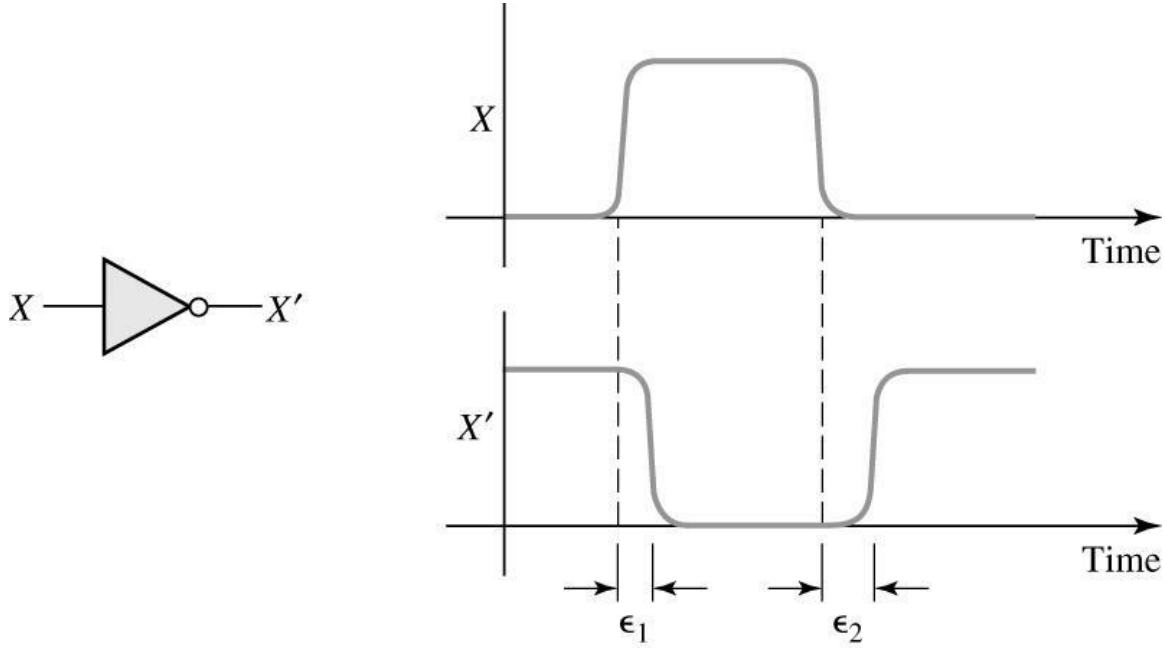

Timing Diagram

Timing diagram for sequential circuit shows signal states in the circuit as a function of time.

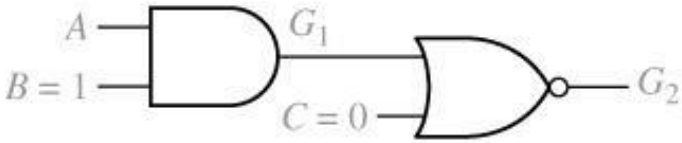

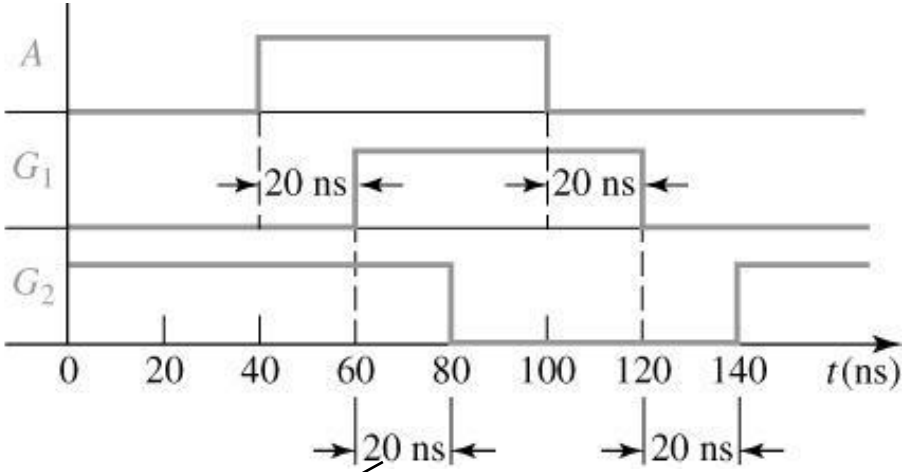

Time delay (after rising edge)

Hazards

Hazards are the unwanted switching transients in the output due to different propagation delays of various paths.

Types of Hazards

(a) Static 1-hazard (b) Static 0-hazard (c) Dynamic hazards

Detection of a 1-Hazard

1−hazard occurs when two adjacent 1's in Karnaugh map are not grouped in a single loop.

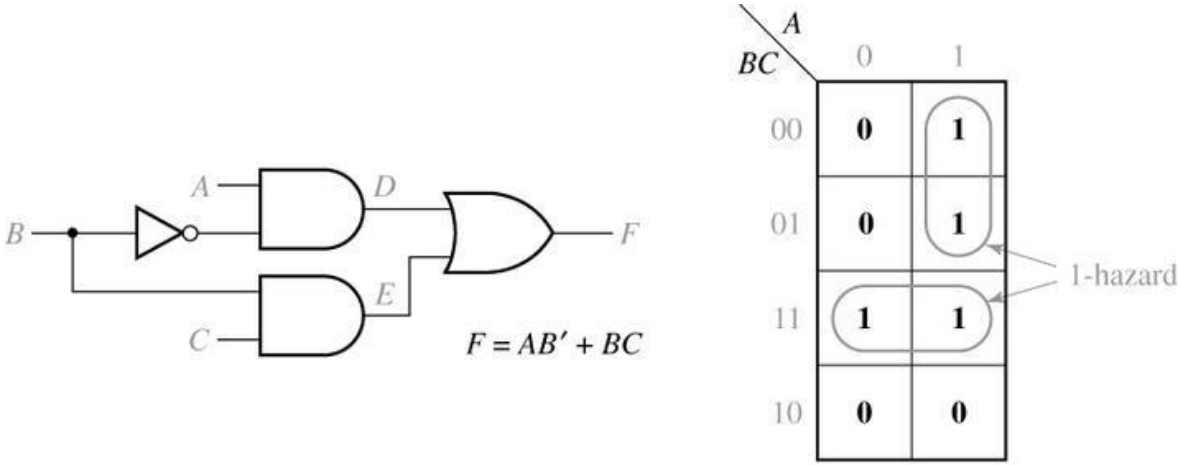

(a) Circuit with a static 1-hazard

A=1, C=1, B=1/0

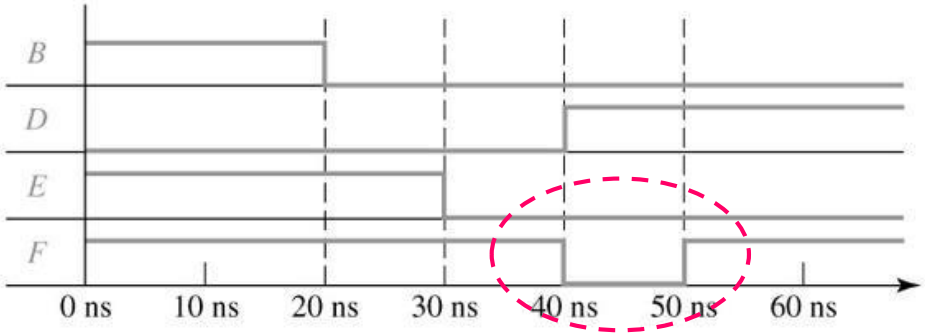

(b) Timing chart

2 gate delay

1 gate delay

Removing 1-Hazard

Add another gate to group the adjacent 1's which are not in a single loop.

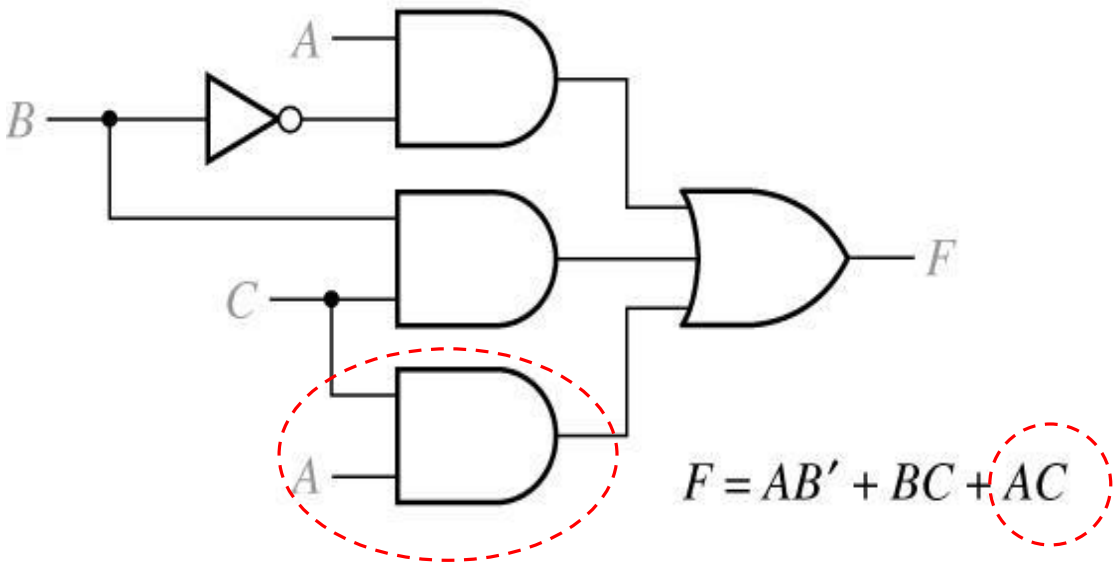

BC \ A	0	1
00	0	1
01	0	1
11	1	1
10	0	0

No longer a minimum sum of products

Detection of a 0-Hazard

$$F = (A+C)(A'+D')(B'+C'+D)$$

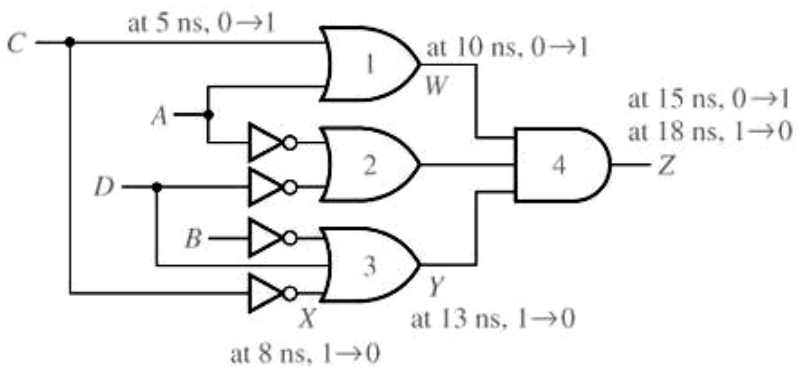

(a) Circuit with a static 0-hazard

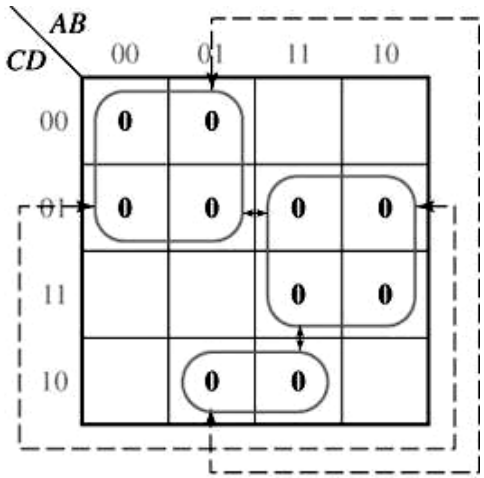

(b) Karnaugh map for circuit of (a)

A=0, B=1, D=0, C=0/1

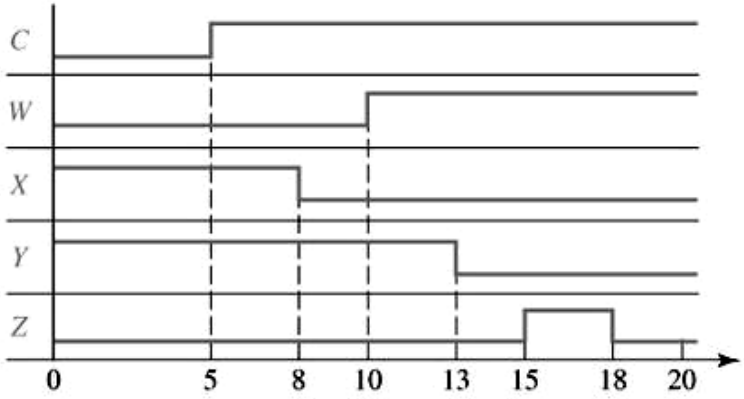

(c) Timing diagram illustrating 0-hazard of (a)

Removing 0-Hazard

Add another gates to group the adjacent 0's which are not in a single loop.

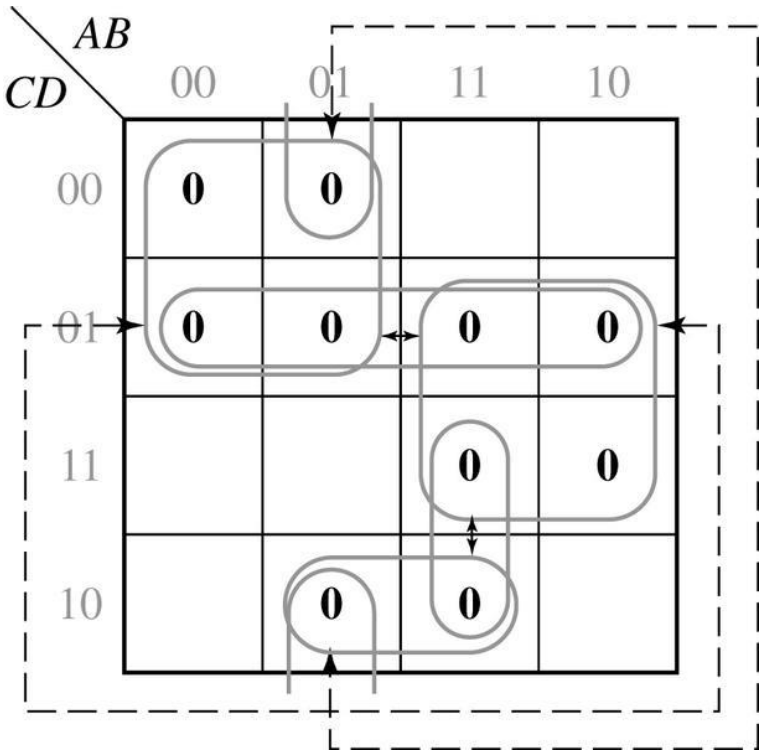

$$F = (A+C)(A'+D')(B'+C'+D)\underline{(C+D')(A+B'+D)(A'+B'+C')}$$